Engineering Notebook

SkillsUSA Additive Manufacturing 2026

Matthew Jeide and Omri Lavi

Table of Contents

Date	Title	Page(s)
-	Title Page	1
-	Table of Contents	2
3/16/26	About Us	3-5
3/16/26	Brainstorms & Sketches	6-8
3/16/26	Fusion Designs	9-12
3/16/26	DfAM and Print Optimization	13-16
3/16/26 - 3/17/26	Evolutionary Prototyping	18-20
3/17/26 - 3/18/26	Refinement & Final Iterations	22-23
3/18/26 - 3/20/26	Conclusions & Future Recommendations	24-25

About Us

Meet the people behind the project

About Us

Omri Lavi

I am a 3rd year engineering student at King High School. I am in the Vex Robotics program and SkillsUSA. This year I competed in Robotics and Automation Technology, for SkillsUSA, and received gold in the regional competition for CA region 6.

About Us

Matthew Jeide

I am a fourth year engineering student at Martin Luther King High School, over my tenure at King, I have taken five engineering courses including the capstone project in Engineering Design and Development. I was the captain of my Robotics team and president of our SkillsUSA Chapter.

Brainstorms & Sketches

Initial thoughts and development towards the task

Brainstorms & Sketches

Omri Lavi - Sketch

This design features a plank with a cup joined into a base to allow for a hinge at the bottom. The top of the arm has a scoop that is deeper at the bottom to allow for the legs of the lego figure to fit. It accounts for the issue of breaking by putting an extra piece at the bottom which will ensure the strength of the piece.

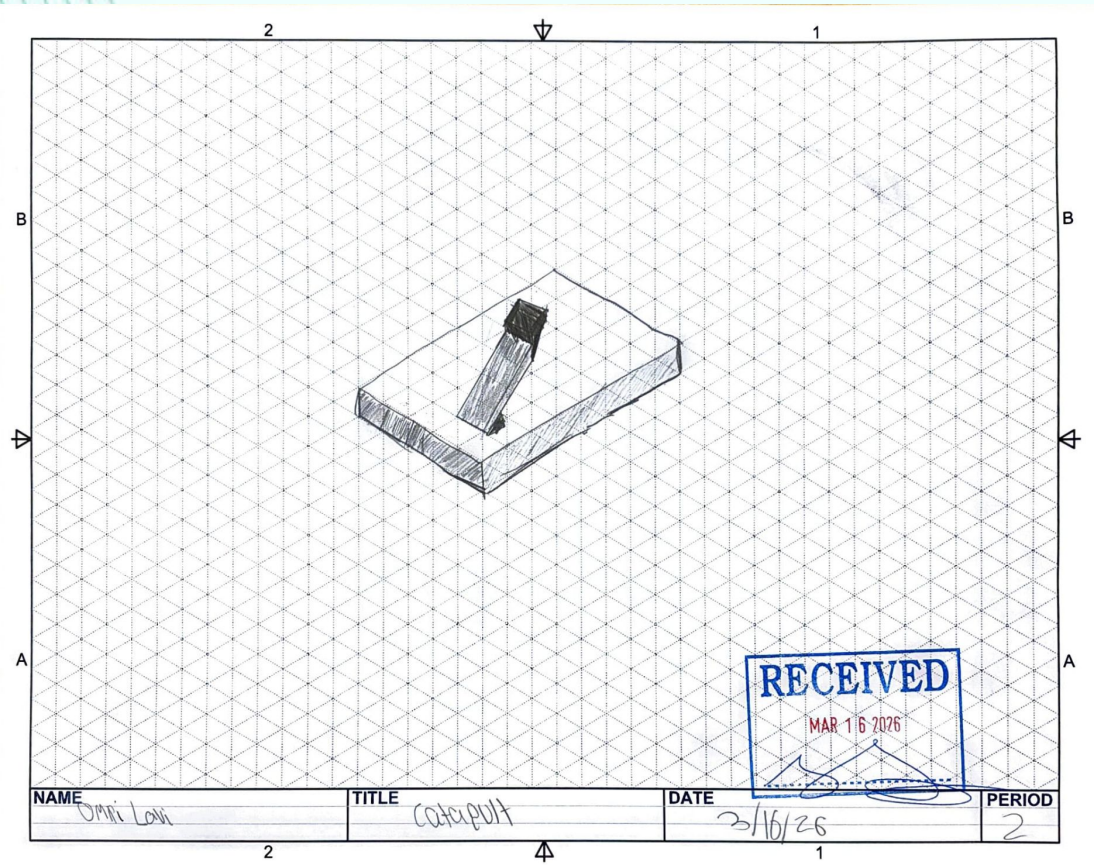

Brainstorms & Sketches

Matthew Jeide - Sketch

This design featured a basic “diving board” shape on top of a thick rectangular base utilizing a compliant mechanism; the payload is loaded into a cylindrical cup at the end of the board. The most significant functional design choice is the intended taper on the diving board, creating stability at the bottom of the board whilst allowing flexibility at the top.

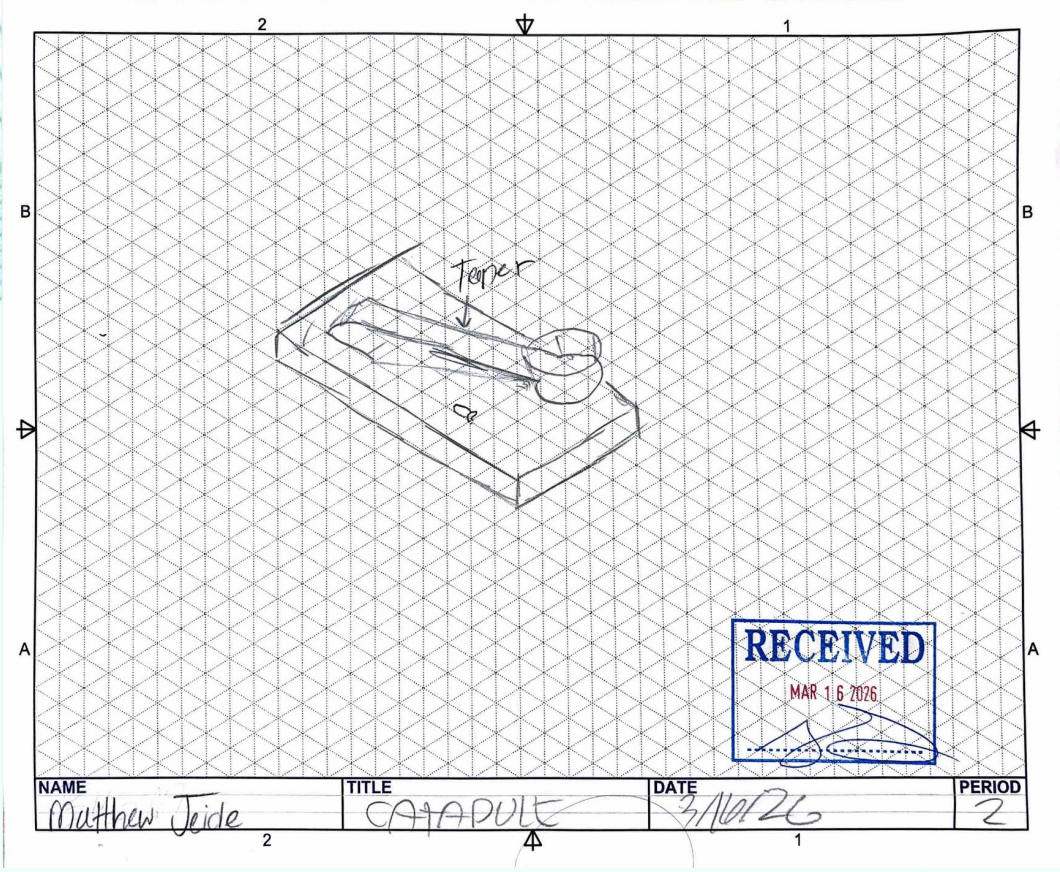

Fusion Designs

Synthesizing diverse concepts into cohesive visual solutions

Fusion Designs

“Big M’s Spectacular Catapult” Iteration 1 (referred to as Revision 1)

This design further expanded on the “diving board” shape previously outlined in Matthew’s sketch, utilizing a compliant mechanism and inherent elasticity of the material to be printed with to store and release the energy to launch the payload.

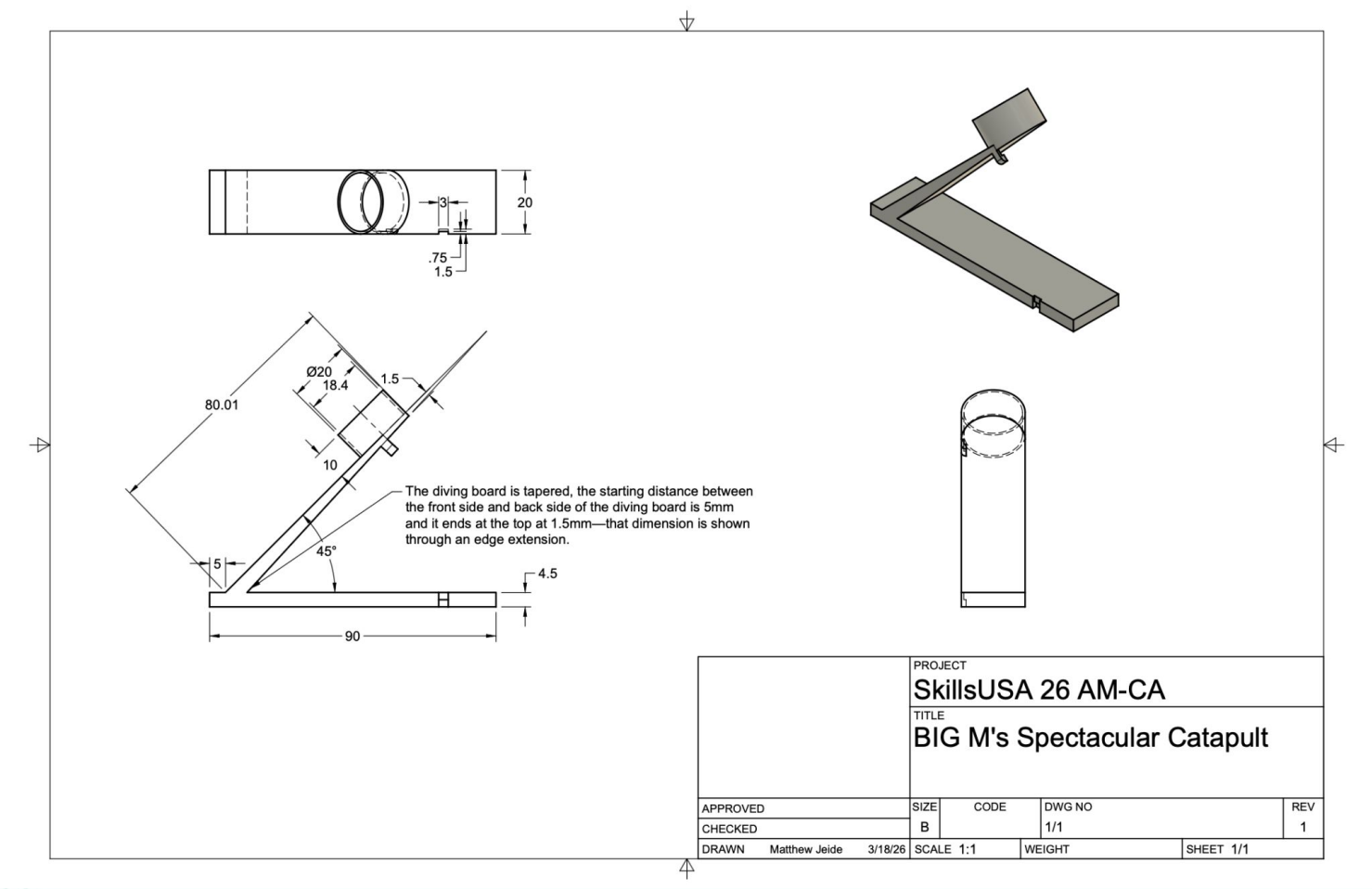

Fusion Designs

“Big M’s Spectacular Catapult” Iteration 1 (referred to as Revision 1)

The launch arm has a taper starting at a depth of 5mm to 1.5mm, because it tapers from thick to thin, it functions as a leaf spring, and the 45 degree angle of the launch arm serves to help guide the payload to go forward rather than just vertical and minimize stress on the material. The basket at the end of the launch arm holds the payload, purposely designed light to minimize wasted launch energy.

The base of the catapult stands at 4.5mm thick, aimed to optimize costs (in filament & print time) while still providing a stable base for the launch arm. The base is the same width as the launch arm, a necessary optimization discussed in depth in **DfAM & Print Optimization** .

There is a clip on the end of launch arm and slot in the base, this is the implementation of a locking mechanism—the user can pull the diving board down until the clip aligns with the slot and lock the diving board into place.

Fusion Designs

“Blurb” Design

This is an early design in which the arm was mounted on the base at a 28.5 degree angle. The arm has a cup at the top to store the payload. I wanted to make a wide lip at the top to have a easier spot to pull down from. This design proved to be at too low of an angle so the launch was forced to go up and not very far forward.

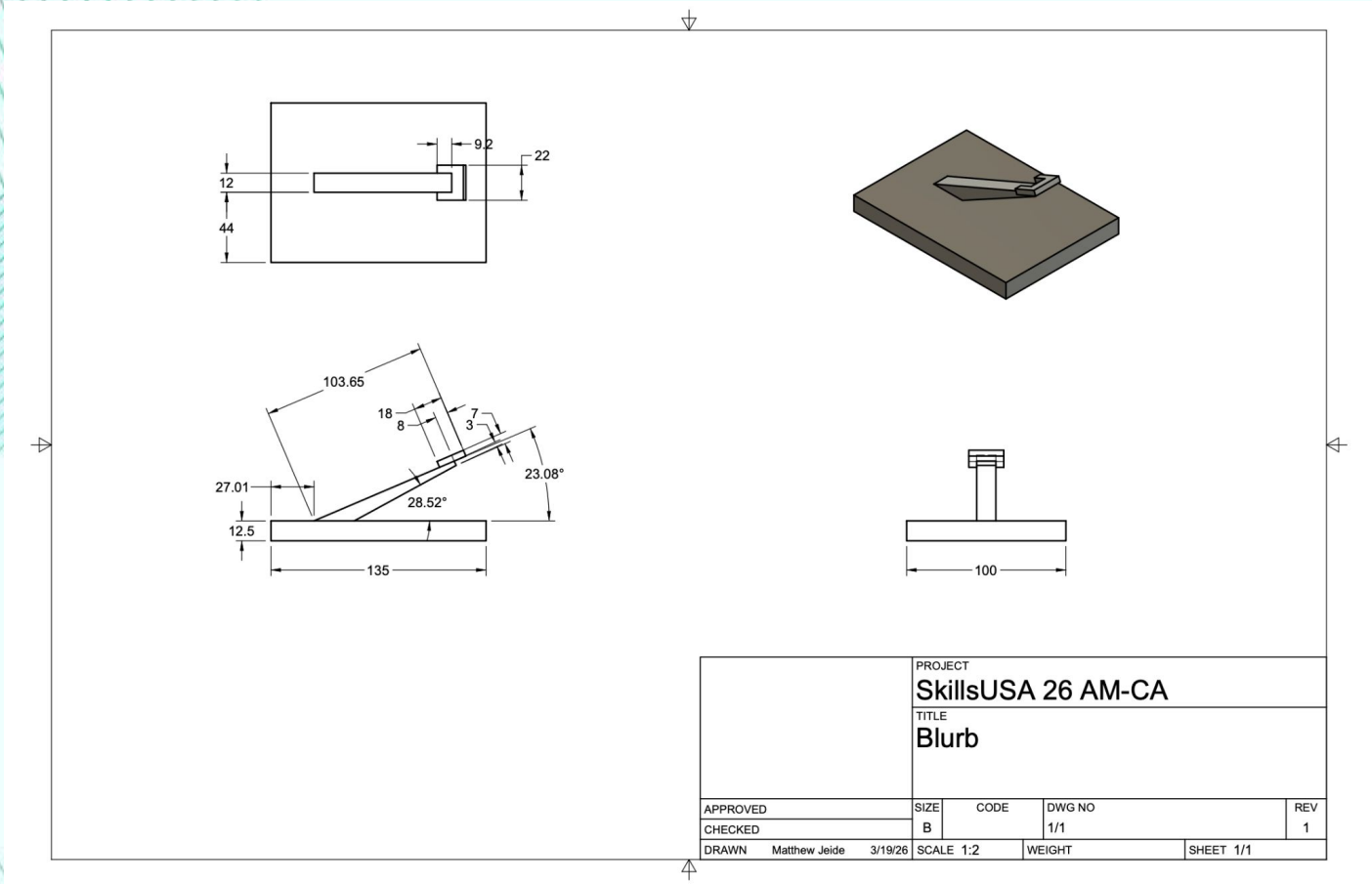

DfAM & Print Optimization

Engineering for the build plate

DfAM & Print Optimization

Decision Matrix

Decision Matrix

SkillsUSA

Step 1: Select criteria needed to solve the problem provided by SkillsUSA

Step 2: Rank the criteria using a scale from 1-5. Keep in mind what the criteria that the judges are looking for.

Step 3: Select the design to print and test. This is determined by the design that scores the highest on the rubric you created.

Team Name: **Momri**

Catapult Design Images

	Durability	**Theortical Functionality**	**Affordability**	**DfAM Optimization**	**Post-Processing**	**Legality**	5 max # of Points	Designer	Insert Fusion Designs:
BIG M'S SPECTACULAR DESIGN	3 — in simulaton, Fusion concluded it might permenantly deform.	4 — in simulation, Fusion concluded it would bend.	5 — in slicing, the design uses less then 50 cents worth of material and takes 6 hours to print.	5 — the print is able to be printed on its side without supports to utilize layer strength.	5 — the design lacks the need for support with DfAM optimization and is unified in one component.	5 — it is within dimensions and utilizes only 3D printed materials.	27	Matthew Jeide	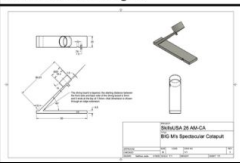
Blurb	5 — in simulation, Fusion concluded it would not deform.	3 — in simulation, Fusion concluded it would hardly bend, making it difficult to perform intended functionality.	2 — in slicing, the design uses more than 2 dollars worth of material and takes more than 18 hours to print.	2 — this design is not able to printed on its side without supports to utilize layer strength. The design is uncessarily large.	3 — the design requires supports to print properly, but it is unified in one component.	5 — it is within dimensions and utilizes only 3D printed materials.	20	Omri Lavi	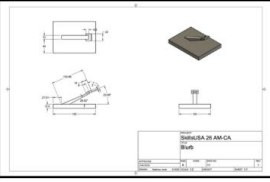

Describe the criteria that the judges might be looking for in your design. Select six criteria and describe below.

Criteria 1:	Durability — is the design durable and potentially capable of multiple launches and or rough handling?
Criteria 2:	Theortical Functionality — the effectiveness of the design.
Criteria 3:	Affordability — is the design effectively designed in terms of filament, time to print, and price?
Criteria 4:	DfAM Optimization — is the design optimally designed for additive manufacturing and FDM?
Criteria 5:	Post-processing — how many parts are printed and or supports needed? Fewer is better.
Criteria 6:	Legality — does the design meet the requirements outlined by the competition rules?

Moving forward, it was clear that we need to select a “hero” design to continue on with. To accomplish this, we utilized design matrix comparing important criteria of both “Big M’s Spectacular Catapult” and “Blurb” such as functionality, affordability, and DfAM optimization. Big M won decisively especially because it was naturally better suited for FDM constraints.

DfAM & Print Optimization

Why Big M? — Print-in Place & Efficiency

A primary goal was to eliminate the need for secondary assembly or external hardware. Big M, referred to as the design/catapult, was engineered to print as a single, cohesive unit. This not only simplifies the manufacturing process but ensures tighter tolerances and fewer points of mechanical failure.

Additionally, through iterative design, the design strikes a balance between structural rigidity and material conservation. By removing unnecessary bulk, the catapult requires only 23g of filament and completes its print cycle in approximately 6 hours, making it a highly efficient, production-ready design.

But the most important detail is Big M's efficient use of anisotropy — see Anisotropy Optimization

DfAM & Print Optimization

Anisotropy Optimization

More on singular unit design and allocative efficiency, the hero design's most compelling attribute is its capability to take advantage of anisotropy—in FDM, layer lines are inherently weakest at their layer lines. The design aligns the continuous filament strands along the tension path, further eliminating the risk of delamination or snapping during firing.

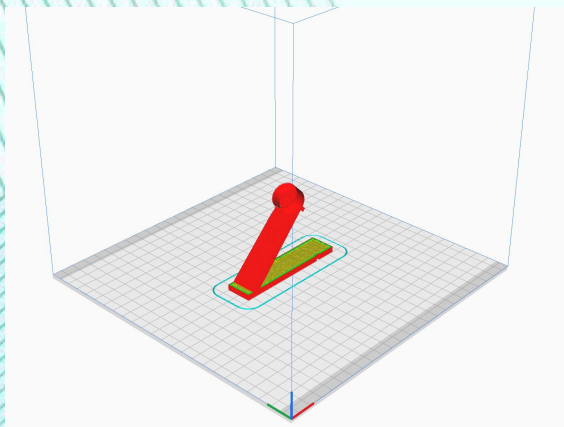

To the left is the "natural" way to print, bottom to top, but this doesn't account for FDM anisotropy as the layer lines are not aligned with the tension path.

To the right is the optimized way to print, the layer lines are aligned with the tension path. The design is capable of printing this orientation without any supports, making it more optimal.

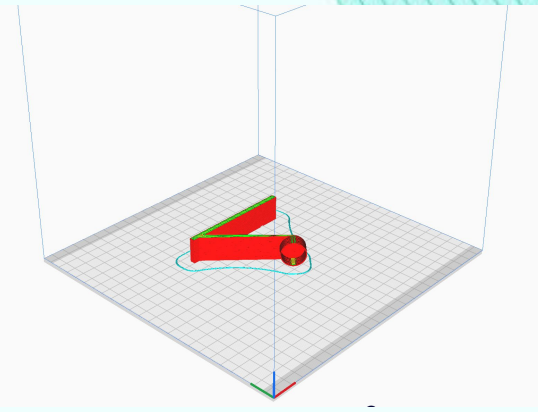

Evolutionary Prototyping

Iterative refinement through physical testing

Evolutionary Prototyping

Revision 1 — Print & Testing Results

Moving forward, the first prototype was printed on Monday, March 16th, 2026. The prototype had modified shell thickness of 2.0mm walls but only had 0.6mm thick roofs, infill was cubic at 40% infill. In the print, the clip mechanism failed to print but the rest of the prototype successfully printed. In testing, it was found that the prototype struggled to launch consistently and powerfully, additionally the basket was too thin and small to hold the payload successfully. Overall, this revision proved the design concept had merit and we continued in refining this design in R2.

Render of R1

Physical Print of R1

Evolutionary Prototyping

Revision 2 — Design and Process

For Revision 2, the most critical flaws of Revision 1 were immediately addressed: the weak launches and lack of durability. Firstly, it was made wider and the basket thicker to address integrity issues, but majority of the changes came from slicer configuration for Revision 2: increasing infill from 40% to 100% and pattern to lines, additionally the shell thickness for roofs increased from 0.6mm to 1.2mm.

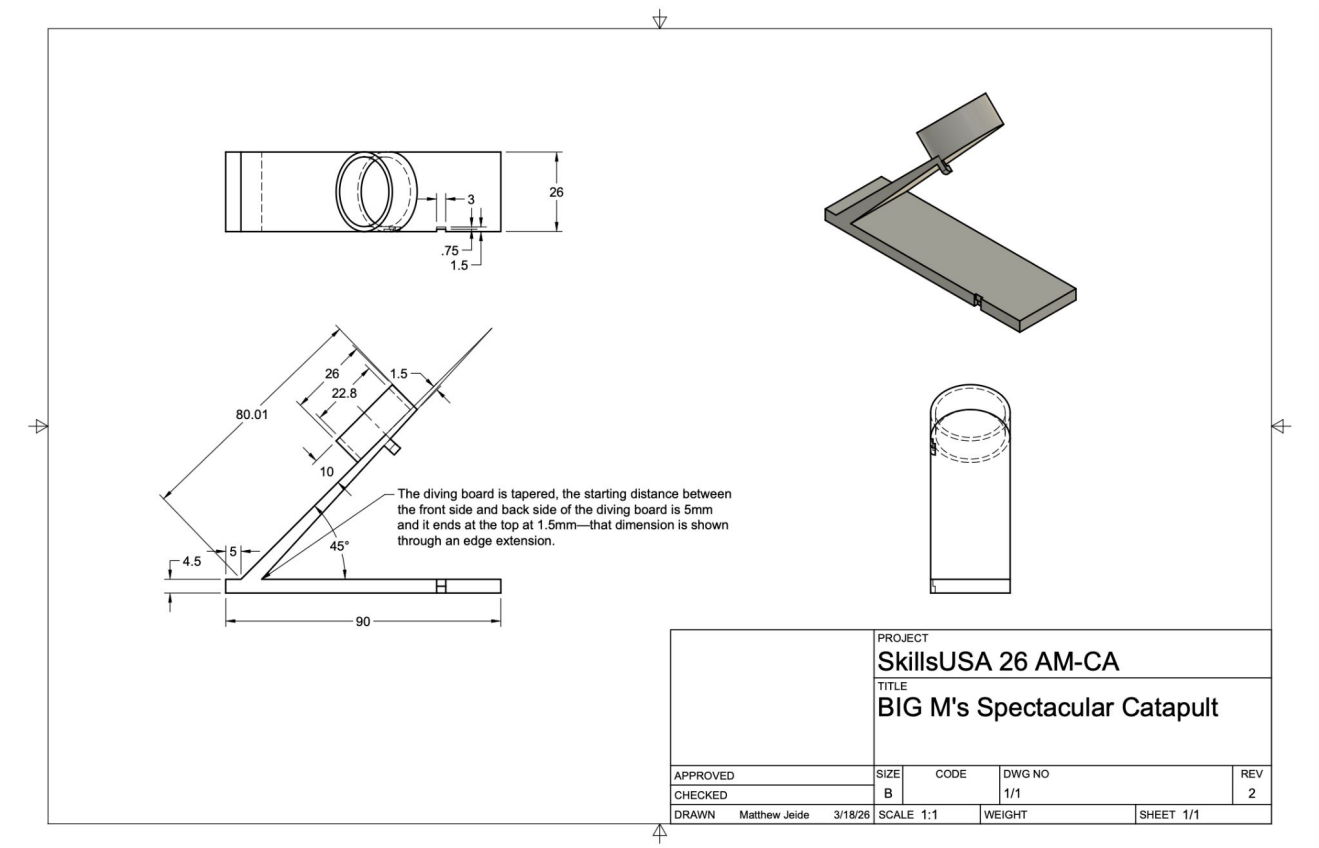

Evolutionary Prototyping

Revision 2 — Print & Testing Results

Second prototype started printing on Monday, March 16th, 2026 and finished early morning Tuesday, March 17th, 2026. The modifications to the design prioritized the increased strength of the prototype, which reflected in its performance. Revision 2 relatively resolved the issues of payload security and in testing, the farthest launch reached 29 feet and 10 inches. However, as it did in Revision 1, it was observed that the “foot” (the base in front of the diving board—shorter than the back) permanently deformed, causing weaker launches afterwards.

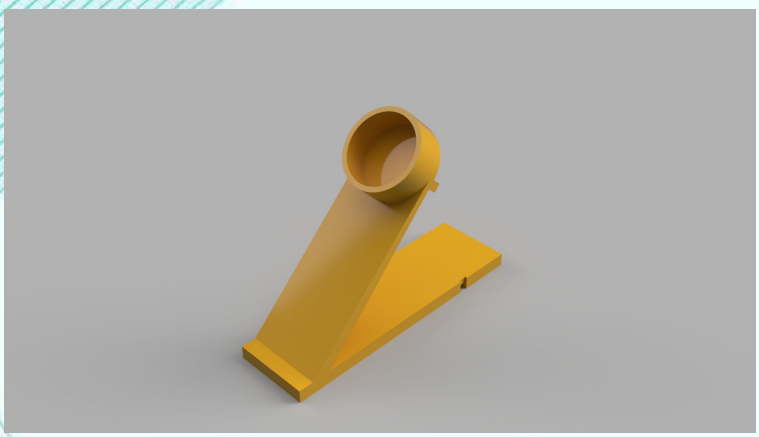

Render of R2

Physical Print of R2

Refinement & Final Iterations

Putting theory to the test

Refinement & Final Iterations

Revision 3 — Design and Process

Revision 2 performed sufficiently, but had some major gaps in consistency. Revision 3 was updated to address these issues, particularly increasing the base thickness significantly. Additionally, the resting angle of the diving board was increased from 45° to 55° to guide a more forward angle rather than purely vertical. For usability, a groove was added for users' thumbs to go to hold in place for more consistent shots.

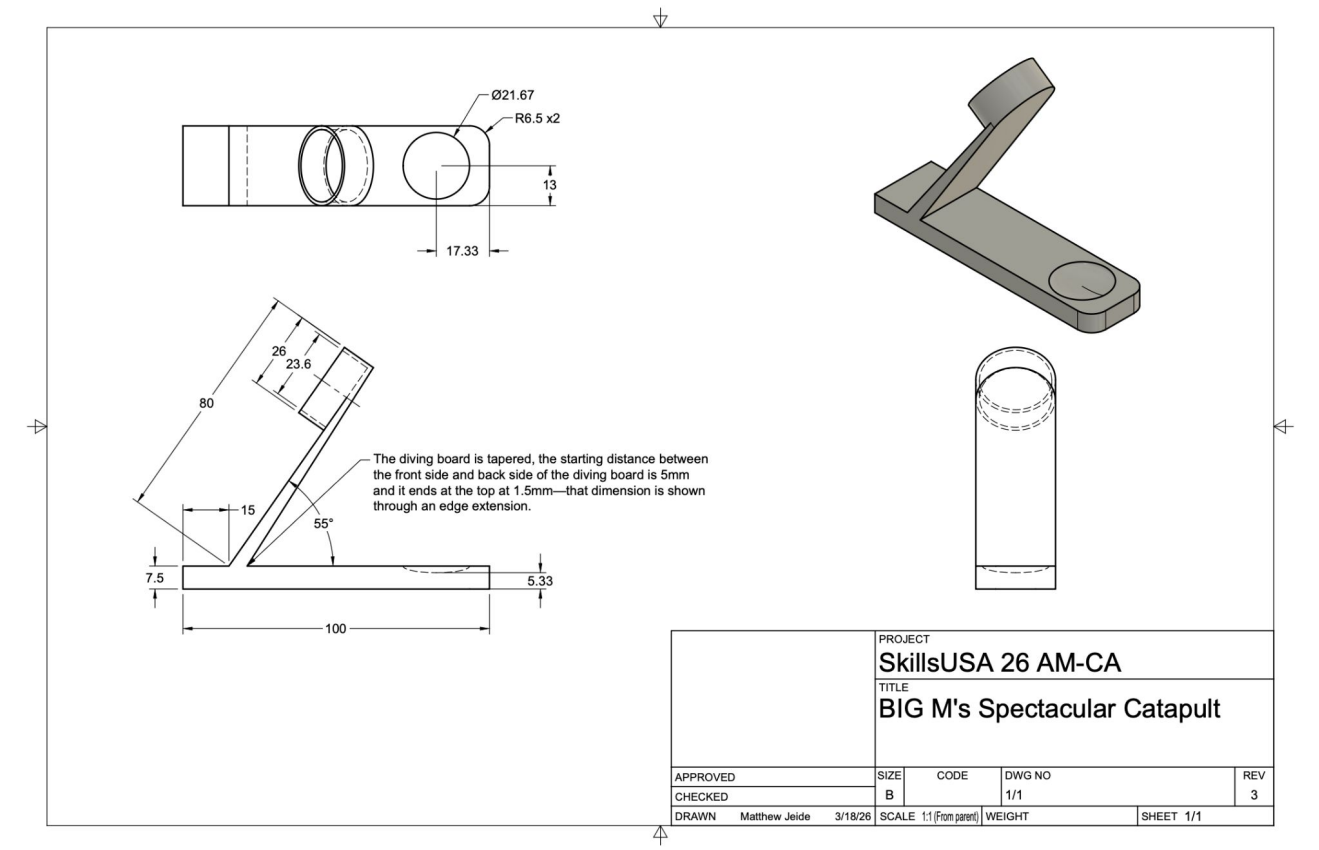

Refinement & Final Iterations

Revision 3 — Print & Testing Results

Revision 3 started printing on Tuesday, March 17, 2026 and finished early morning on Wednesday, March 18, 2026. It used the same configuration as Revision 2.

Revision 3 performed exceptionally well, much more consistent in launches and even stronger. The furthest launch accomplished by R3 was measured at 36 feet and 4 inches. Revision 3's increased resting angle increased the mechanical advantage, much less force is needed to get consistently farther launches.

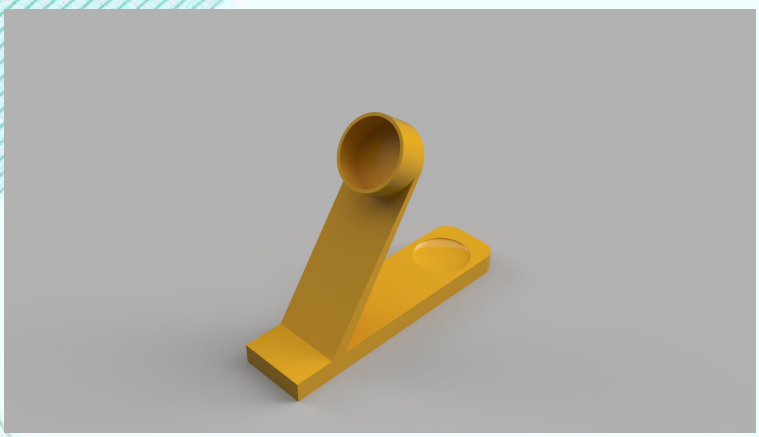

Render of R3

Physical Print of R3

Conclusions & Future Recommendations

Post-Iterative Analysis: Ergonomics and Scalability

Conclusions & Future Recommendations

Acknowledging the limitations

We only had a week to develop this solution, and while we're satisfied with the solution we made, we must acknowledge that there are some improvements that could be made for future iterations.

The biggest issue observed was in ergonomics, each revision required the user to push down forcefully on less than 2mm thick wall to launch the catapult—the narrow surface area creates high pressure on the user's finger, leading to discomfort and inconsistent launches. Our proposed solution in a future iteration would be to integrate a widened launch tab or a filleted trigger pad to distribute the force more evenly across the fingertip.

Additionally, there is definitely capacity to optimize material consumption of the current revision, some areas could certainly benefit from less materials—and it would look more visually appealing.

Despite the aesthetic and ergonomic limitations identified during this one-week sprint, the Revision 3 prototype successfully validates the 'Big M' architecture and remains the baseline for all future development.